Make your Fresh HOT Prepared Food offerings mobile and flexible with a self-service profit center - our MHFC Series Mobile Hot Food & Wing Bar !

FUTURE PROOF YOUR HOT FOOD BUSINESS !

Plug and play mobile convenience, manageable size & affordable cost make this an ideal vehicle to either start a hot food program or expand your existing hot food program. Start with one mobile unit and add more as your business grows, or as you add food product categories.

Based upon hourly and daily traffic patterns, you can tailor how many units are in use at any one time to maximize merchandising impact, while controlling shrink. If you are happy with your full-service hot food program – add our mobile unit for a specific food category and watch how much more profitable your hot food program becomes.

This mobile case is ideal for:

- Hot Wings
- Hot Asian Food
- Hot Italian Food
- Hot Comfort Foods
- Hot Vegan/Vegetarian Food
- Hot Curry
- Hot Breakfast Buffet
- Hot Soup
- Hot Chili and Stews … & More!

If you are selling hot food full service, you won't believe the profitability of this self-service unit due to reduced labor costs, convenience for shoppers, higher sales and lower shrink.

This unit is a MONEY MAKER and a SELL-THROUGH BEAST !

MHFC Series Mobile Hot Food & Wing Bar

Celebrating 70 Years in 2017 !

HOT
Atlantic Food Bars
Hot & Cold Food Equipment Specialists
888-MEAL-SOLUTIONS (888-632-5765)
info@atlanticfoodbars.com www.atlanticfoodbars.com

MHFC Series

Mobile Hot Food & Wing Bar

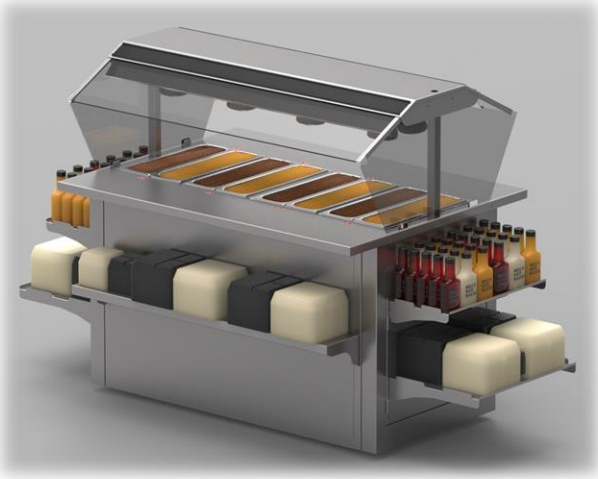

MHFC6044 Shown with
Stainless Steel Finish & Removable End Shelves

Standard Features

- Wet OR dry hot food well operation – flexible and future proof
- Infinite & individual control top & bottom heat of EACH well
- Heavy-duty locking casters and plug-in operation allow unit to be used and moved anywhere in your store
- Frameless TEMPERED glass sneezeguard
- Clear TEMPERED glass end draft control panels with no plastic to scratch, craze or crack
- Easily accessible controls located behind hinged doors on each end
- Heavy 14-gauge 304 stainless steel countertop
- Stainless steel body
- Side container & merchandising shelves
- Arrives fully assembled – unwrap, plug in and start selling!

MHFC6044 Shown with
Home Team Sports Package including
Interchangeable Magnetic Team Color Panels

Options

- ❑ Solid surface countertop
- ❑ Stone countertop
- ❑ Radiant strip heaters with LED lighting in lieu of infrared heat lamps
- ❑ Powder coated body in any color
- ❑ Single sided format for end cap or wall with front controls
- ❑ Side controls
- ❑ End merchandising shelves
- ❑ Dipping Sauce cup racks
- ❑ Organizers for container shelves
- ❑ Home Team Sports Package including interchangeable magnetic team color panels

Matching Multi-Function Modules

- ❑ Soup bar module with/without sneezeguard
- ❑ Rice cooker end module
- ❑ Hot double-sided multi-level grab & go end module
- ❑ TopHot™ heated grab & go display on top of canopy
- ❑ AquaDuct™ clean and wastewater transporter
- ❑ Body / countertop extension with and without sneezeguard
- ❑ Matching refrigerated salad/olive/bulk food bar

Celebrating 70 Years in 2017!

HOT Atlantic Food Bars
Hot & Cold Food Equipment Specialists
888-MEAL-SOLUTIONS (888-632-5765)
info@atlanticfoodbars.com www.atlanticfoodbars.com

MHFC Series

Mobile Hot Food & Wing Bar

Atlantic Food Bars MHFC Series Mobile Hot Food & Wing Bars are covered by our INDUSTRY'S LONGEST WARRANTY – 1 year parts and labor. Warranty does not cover glass breakage or heat lamps, or abuse / misuse by operator. It is our company's policy and mission to continually improve our products, consequently, Atlantic Food Bars reserves the rights to change materials and specifications without notice.

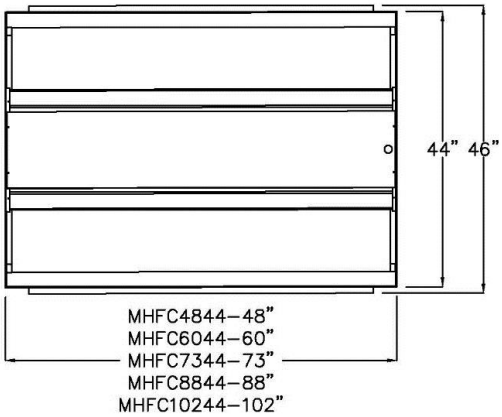

MHFC6044 Shown with Powder Coated Finish

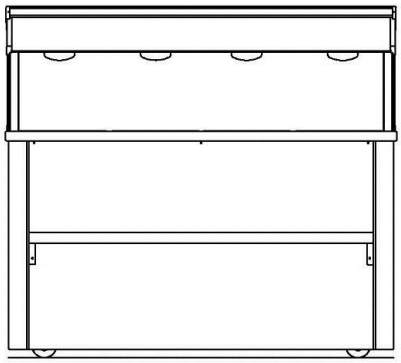

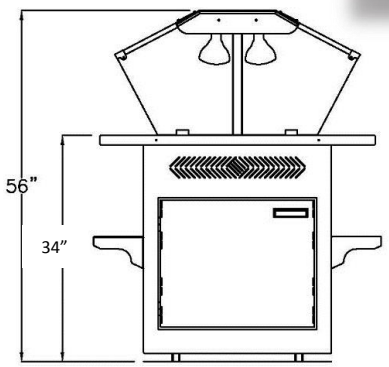

IP Code	O.A. Dimensions L" x W" x H"	Capacity 12 x 20 pans	Electrical			
			Voltage	Amps	Plug	MCA
MHFC4844	48" x 46" x 56"	3	120/208	26.3 - 1Ø 17.9 - 3Ø	L14-50P L21-30P	32.9 22.4
MHFC6044	60" x 44" x 56"	4	120/208	32.3 - 1Ø 24.0 - 3Ø	L14-50P L21-30P	40.4 30.0
MHFC7344	73" x 46" x 56"	5	120/208	42.3 - 1Ø 29.8 - 3Ø	L14-60P HBL560P9W	52.9 37.3
MHFC8844	88" x 46" x 56"	6	120/208	48.5 - 1Ø 36.5 - 3Ø	L14-60P N/A	60.6 45.7
MHFC10244	102" x 46" x 56"	7	120/208	54.5 - 1Ø 38.0 - 3Ø	Consult Factory	68.3 47.5

If you don't size the size you need – just ask!
We build in any length, depth or height.

Celebrating 70 Years in 2017 !

HOT
Atlantic Food Bars
Hot & Cold Food Equipment Specialists
888-MEAL-SOLUTIONS (888-632-5765)
info@atlanticfoodbars.com www.atlanticfoodbars.com

Build the perfect merchandiser for YOUR food service operation !

FUTURE PROOF YOUR HOT FOOD BUSINESS !

MHFC Series Options & Accessories

TOP HOT™ PACKAGED FOOD TOP CANOPY

Add this option to our MHFC Series and increase your sales in the same footprint ! Offer your customers the convenience of GRAB & GO, build PROFITABLE cross merchandising sales, pack up food in pans and price up before it becomes unsalable - turn SHRINK into 100% PROFIT !!! TopHot ™ can be added in the field as a retrofit.

RICE COOKER & SOUP END MODULES

Available with or without sneezeguard - add as a retrofit to an MHFC unit already in service and build PROFITABLE cross merchandising sales in a nominal footprint. Soup is NOT JUST FOR WINTER !!! Sell Rice, Chili, Stew, and countless local favorite recipes for high profit, low shrink and low labor cost.

HEATED MULTI-DECK ROTISSERIE CHICKEN, PIZZA & SANDWICH HOT GRAB & GO

Roll this 4 level matching unit up to the end of our MHFC series hot bar and watch your hot food sales explode. Double sided unit is shown with clear-view ends for maximum visibility to build PROFITABLE impulse sales. Brilliant illumination attracts shoppers like bees to honey.

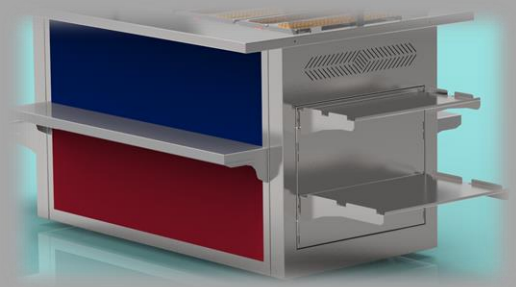

HOME TEAM SPORTS EDITION

Includes interchangeable magnetic color panels that can be removed and rotated based upon the sports season and your team's colors! Panels easily slide into the body behind the hinged access door for convenient storage.

REMOVABLE END SHELVES

Easy to install and remove end shelves - NO tools required ! Expand your sales area for PROFITABLE complementary items like dipping sauces, bakery items OR add more capacity for food containers, cutlery and napkins. Cleverly designed shelves do not impede doors from opening or closing. Shelves can be easily added as an accessory anytime.

Celebrating 70 Years in 2017 !

HOT Atlantic Food Bars

Hot & Cold Food Equipment Specialists

888-MEAL-SOLUTIONS (888-632-5765)

info@atlanticfoodbars.com www.atlanticfoodbars.com

MATCHING Mobile Hot & Cold Wing Bars !
Maximize Your Food Bar Sales with The Ultimate Profit Partners – our MHFC HOT & MRM COLD Series

Plug and play mobile convenience, manageable size & affordable cost make this an ideal vehicle to either start a hot wing program, generate additional profits and reduce your shrink with a cold wing program, or both! Start with one mobile unit and add more as your business grows.

Do you want to add a hot wing program to your store, but have labor constraints ? Kitchen capacity or availability challenges ? Shrink concerns ?

Sell COLD wings self-service by the pound !

Problems solved.

(Better yet – sell hot AND cold wings in a small footprint !)

COLD

HOT

If you are selling hot wings, you won't believe the profitability of our self service refrigerated wing bar – simply stock it and sell it! Reduced labor costs, convenience for shoppers and higher sales are a MONEY MAKING formula. Together, our hot and cold wing bars are SELL-THROUGH BEASTS!

MHFC & MRM Series
Mobile Wing Bars – Hot & Cold

Celebrating 70 Years in 2017 !

Atlantic WING Food Bars

Hot & Cold Food Equipment Specialists

888-MEAL-SOLUTIONS (888-632-5765)

info@atlanticfoodbars.com www.atlanticfoodbars.com

Matching Soup Bar Module

THE MSBM SERIES – SOUP BAR

Add this to your food offering whenever you are ready to build your prepared food sales even more. Units abut and look like twins !

Celebrating 70 Years in 2017 !

HOT
Atlantic Food Bars

Hot & Cold Food Equipment Specialists

888-MEAL-SOLUTIONS (888-632-5765)

info@atlanticfoodbars.com www.atlanticfoodbars.com

THE AQUADUCT ™

THE AQUADUCT™ CLEAN WATER / WASTE WATER / SOILED FOOD PAN TRANSPORT CART FOR MOBILE HOT FOOD & WING BARS

No more lugging buckets or pans of dirty & clean water back and forth! This mobile solution makes maintaining your hot food bar pain-free - reducing spills, slip & falls, employee injuries, mishaps and operator error, ALL WHILE SAVING TIME and improving your operations! Mounted on heavy- duty casters and featuring fully-welded stainless steel construction, this transport station is available with an optional stainless-steel cover and features a 14-gauge 304 stainless steel deck & floor panel. Water fill tank is sized to fill a 4-pan bar. The clean water fill nozzle and wastewater drain outlet is recessed within the perimeter of the body to protect from damage. The recess in base lowers the top of the tank to the perfect height to drain from the hot food & wing bar drain outlet. Bus pan (21 1/2" x 17" x 7") slides in and out, making transporting dirty pans and utensils as well as cleaning a breeze, with shelf turndown for easy removal when soiled. The rear of the cabinet features a stainless-steel welded handle and is open top to bottom for ease of cleaning and access to containers. Drain on wastewater tank is positioned perfectly for matching the hot well drains. Let gravity do its job and end your concerns with mechanical failure. No moving parts to fail !Includes water filter to protect your hot food bar and give it a long, trouble free life.

Options & Accessories

24" x 24" Unit Shown
WITHOUT Skirt & Top

Top OR Bottom Electric Feed Comes Standard

24" x 24" Unit Shown
WITH Skirt & Top

MHFC Series

CLICK TO PLAY VIDEO DEMO !

Celebrating 70 Years in 2017 !

HOT

Atlantic Food Bars

Hot & Cold Food Equipment Specialists

888-MEAL-SOLUTIONS (888-632-5765)

info@atlanticfoodbars.com www.atlanticfoodbars.com